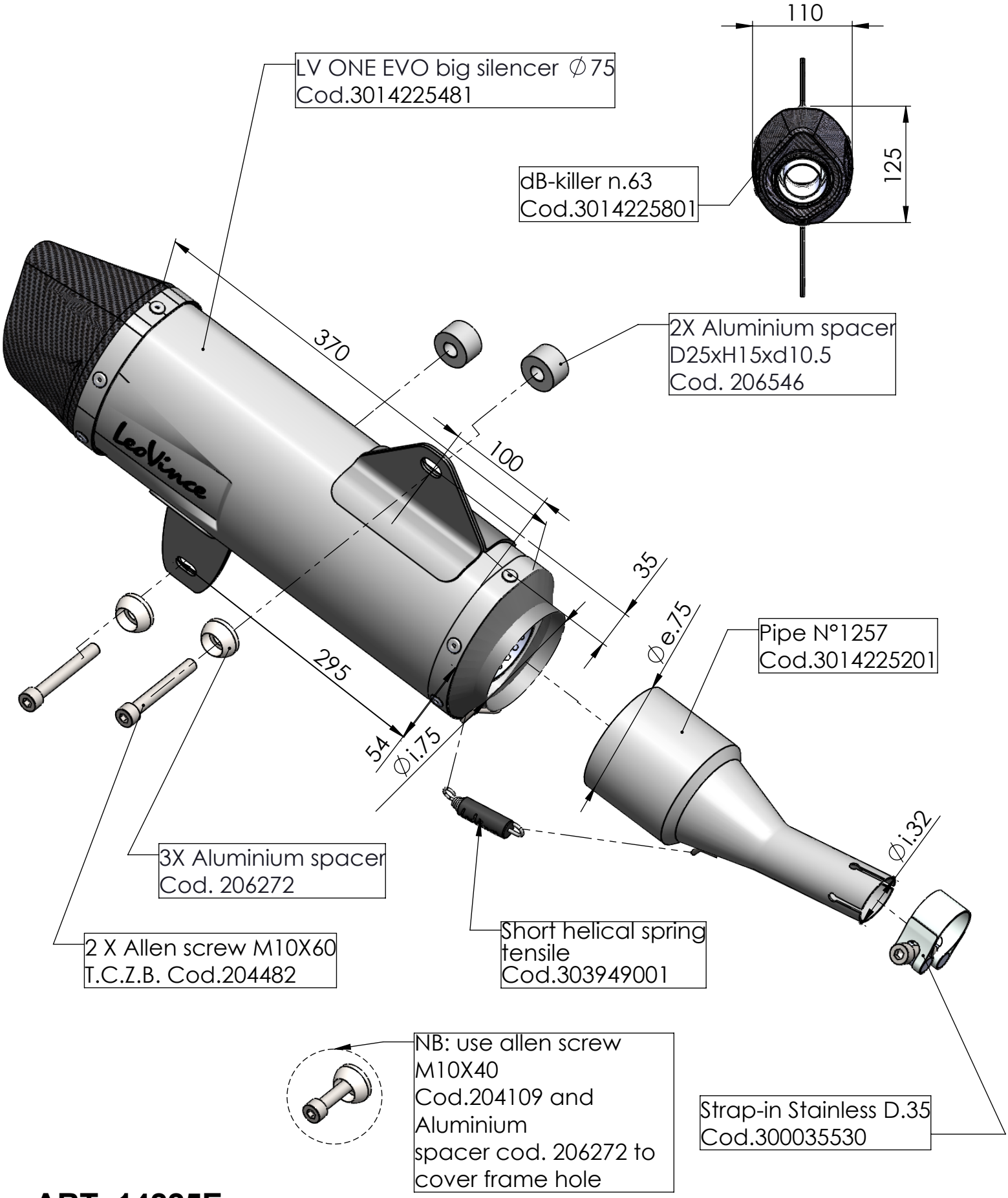

ART. 14225E

YAMAHA X-MAX 300 / IRON MAX

SLIP ON - LV-ONE EVO - STAINLESS STEEL